						变更针头与针管结构

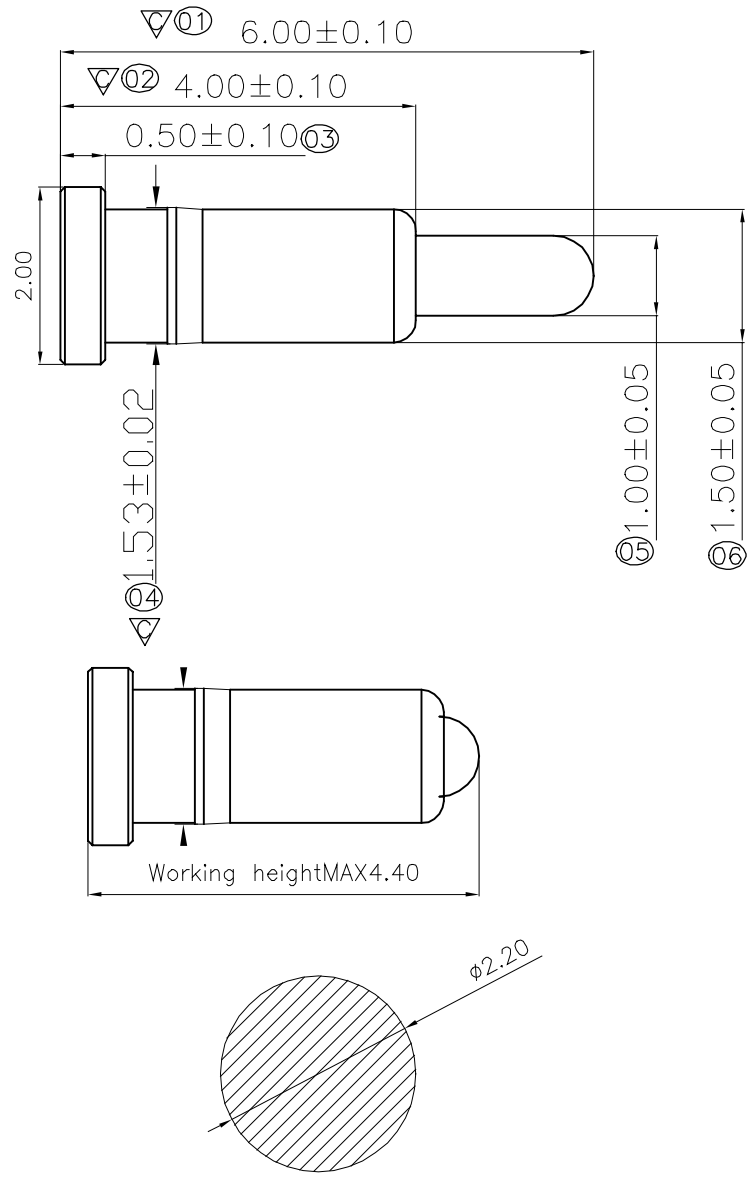

NOTE:

1.Material
 .Plunger: Brass
2.Plating
 .Contact surface:3u" minimum Au over 80~100u" Ni
3.Electrical
 .Rated Current & Voltage: DC 12V; AC 1~1.65A,24H
 .Contact Resistance: 25mΩ maximum
4.RoHS COMPLIED PROUCT.
5.Elasticity:Stroke 0mm:10gfStroke 0.25mm:50gf Stroke 1.60mm
 (or fully compressed):100−150gf
6.Life (Million):stroke range Max0.5~4mm,根据Pin的总类不一样Max.
 Stroke 10000次 Touch down后重量变化 0.5gf以内Creep变形最小化
7.Temperature: −40度~150度
8.Use:电子摄影：通电；手机：天线、接地、电池接触。

PCB LAYOUT

Layout Tolerance:±0.20mm

DIM	TOL	DIM	TOL
X.		X°	3°
X.X	±0.20	X.X°	
X.XX	±0.15	X.XX°	
X.XXX	±0.10	X.XXX°	

深圳市泰科汉泽精密电子有限公司
Tyco Hanconn Precision Electronics

Spring Probe

DRAW NO.		DATE	MATERIAL:Brass C3604		DRAW NAME:
DESIGN:	譚立強	2012.02.13	FINISH:Au3u",Ni,80~120u"		SEE TABLE
CHECK:			FILE:		
REVIEW:			P/N:SEE TABLE		
			REV. A1	SCALE N/A	UNIT: mm / SHEET: 1/1